MODEL FV33i FireIn SPECIFICATIONS

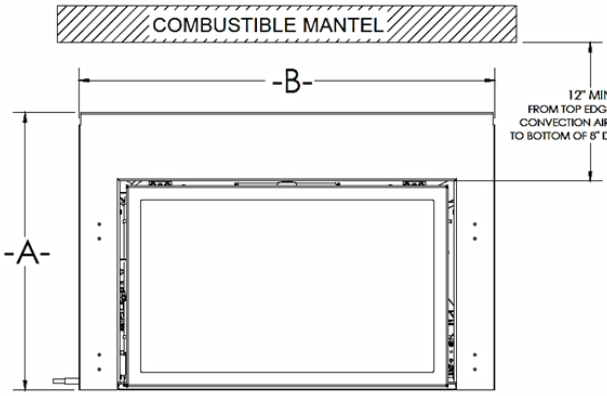

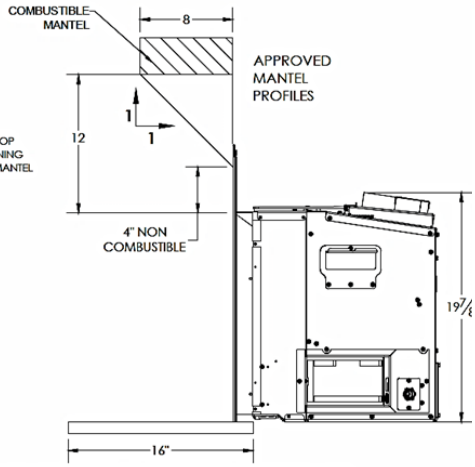
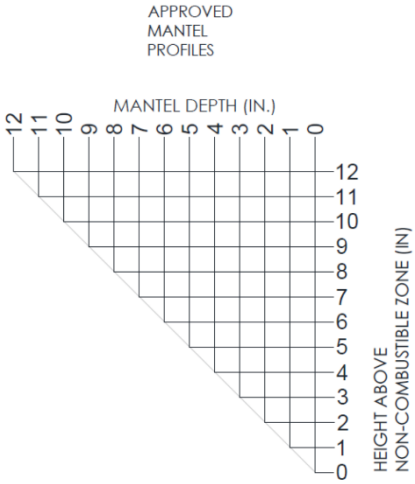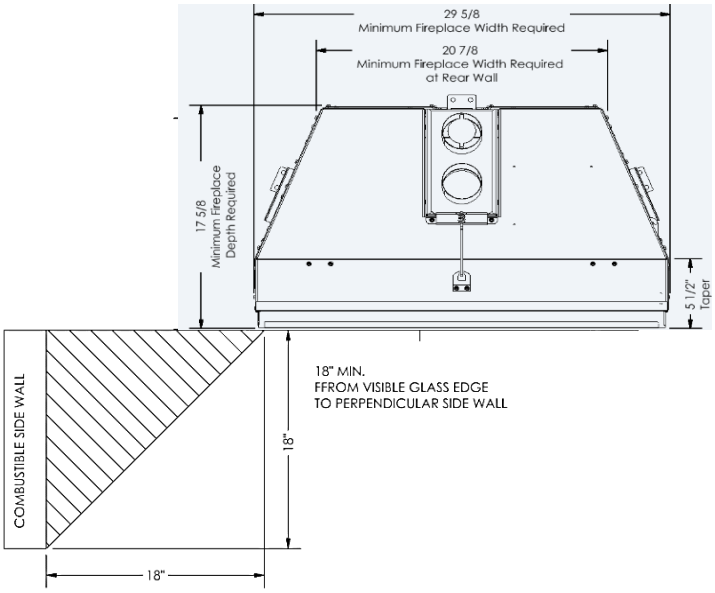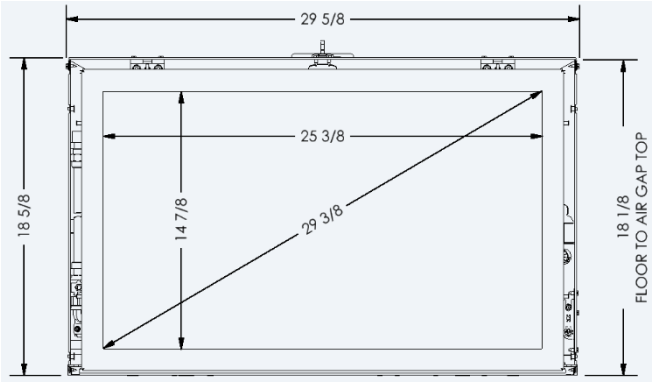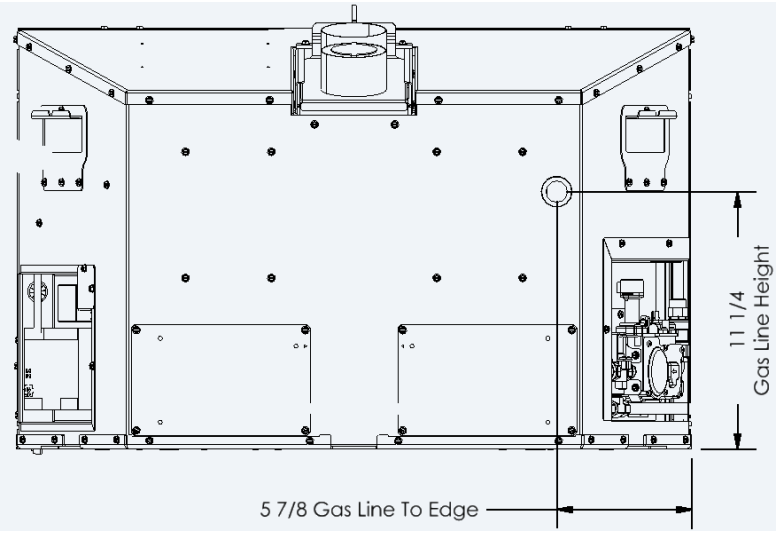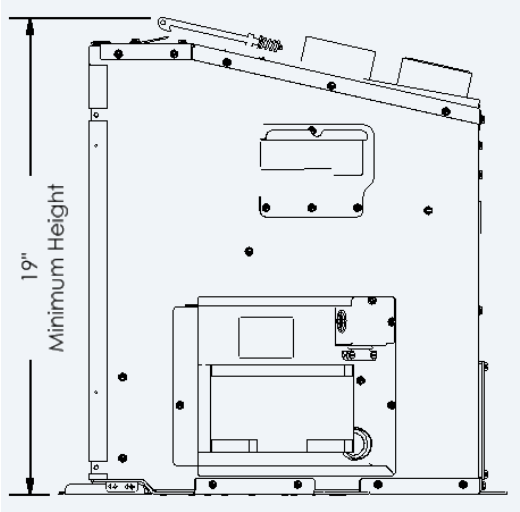
HEARTH PROTECTION PAD REQUIRED IF NOT ELEVATED.
FOR EVERY 1-INCH THE UNIT IS ELEVATED, HEARTH
PROTECTION PAD DEPTH MAY BE REDUCED BY 2". IF ELEVATED
6" OR MORE, NO HEARTH PROTECTION PAD IS REQUIRED.